ModernForm Doors

Folded Panel

Quotation ☐
Order ☐

Please tick accordingly - Order will be processed if no tick is present

82 Achievement Way
Wangara. WA 6065
Tel: 08 9302 2114
Fax: 08 9302 2118
Website: www.modernformdoors.com.au
Email: modernformdoors@westnet.com.au

Customer: _____ **Order No:** _____

Address: _____ **Signature:** _____

_____ **Date:** _____

Telephone: _____ **Fax:** _____ **Mobile:** _____

Panel Design:		**Colour:**	

All panels edge profiles are square

Single Thickness Folded Panel

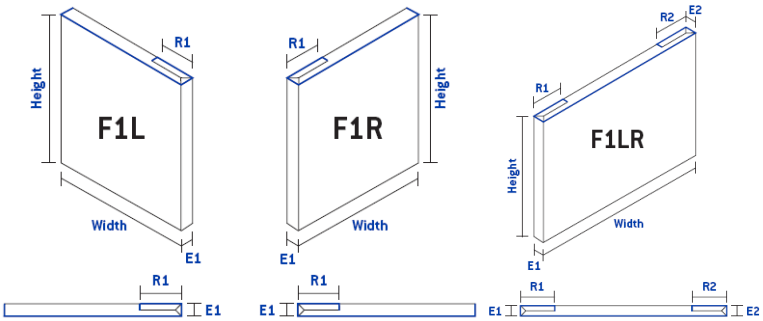

Single Thickness 18mm Material

Total Width (tw) = Width + E1 + E2 + R1 + R2 (Over all width size as shown below)
Minimum Sizes: 150 x150mm
Maximum Sizes: Solid Colours 2400h x 1180w or 1180h x 2400w
Woodgrains 2400h x 1180w or 1180h x 1180w

Qty	Height (mm)	Width (mm)	E1	E2	R1	R2	L/R
			18mm	18mm			
			18mm	18mm			
			18mm	18mm			
			18mm	18mm			

Double Thickness Folded Panel

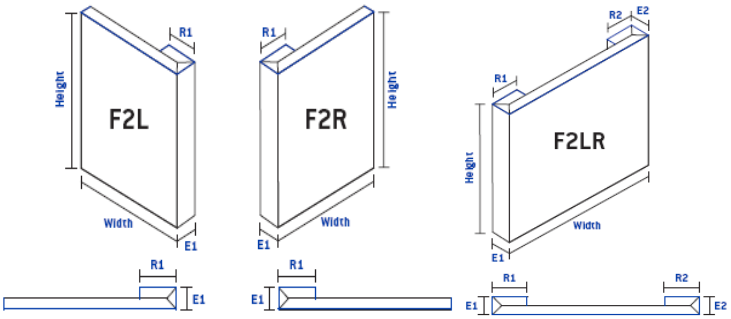

Single Thickness 18mm Material

Total Width (tw) = Width + E1 + E2 + R1 + R2 (Over all width size as shown below)
Minimum Sizes: 150 x150mm
Maximum Sizes: Solid Colours 2400h x 1180w or 1180h x 2400w
Woodgrains 2400h x 1180w or 1180h x 1180w

Qty	Height (mm)	Width (mm)	E1	E2	R1	R2	L/R
			36mm	36mm			
			36mm	36mm			
			36mm	36mm			
			36mm	36mm			

Variable Thickness Folded Panel

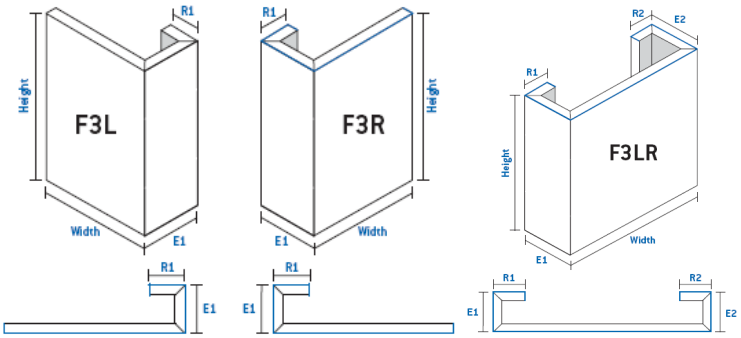

Single Thickness 18mm Material

Total Width (tw) = Width + E1 + E2 + R1 + R2 (Over all width size as shown below)
Minimum Sizes: 150 x150mm
Maximum Sizes: Solid Colours 2400h x 1180w or 1180h x 2400w
Woodgrains 2400h x 1180w or 1180h x 1180w

Qty	Height (mm)	Width (mm)	E1	E2	R1	R2	L/R